# SWIM SPA PROPULSION TOPSIDE WIRING
## REV 2011-X310192

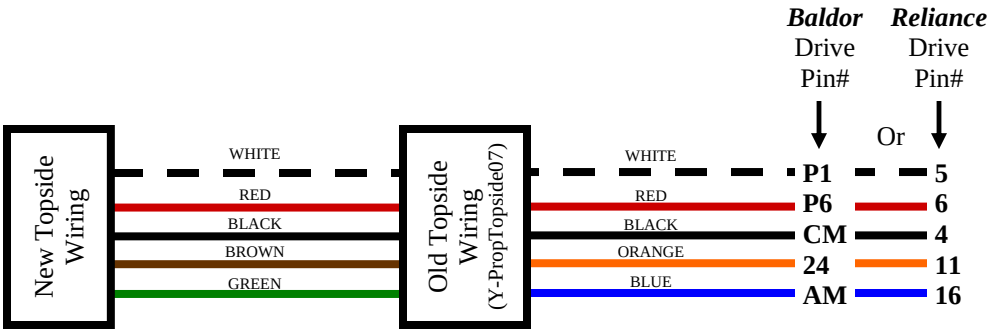


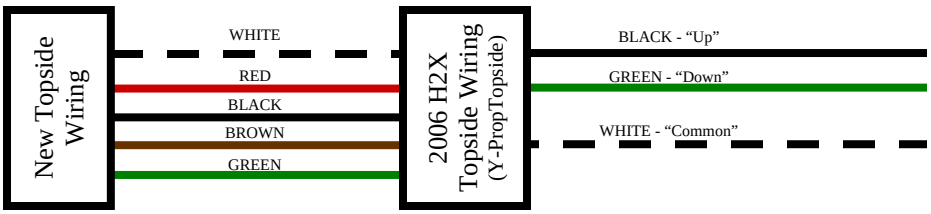



Master Spas Inc.
Customer Service Dept.
6601 Lincoln Parkway, Ft. Wayne, IN 46804
Phone: (800) 860-7727 E-mail: CustomerService@MasterSpas.com